# 1897636
# Thames Queen Four Poster Bed

## Parts and Hardware List

| | | |
|---|---|---|
| A. | Headboard Posts | 2 pcs |
| B. | Footboard Posts | 2 pcs |
| C. | Headboard Panel | 1 pc |
| D. | Footboard Rail | 1 pc |
| E. | Fluted Posts | 4 pcs |
| F. | Finials | 4 pcs |
| G. | Long Canopy Rails | 2 pcs |
| H. | Short Canopy Rails | 2 pcs |
| I. | Support Canopy Rails | 2 pcs |
| J. | Side Rails | 2 pcs |
| K. | Support Slats | 4 pcs |
| L. | Center Support Slat | 1 pc |
| M. | Leg Supports | 3 pcs |
| N. | Short Allen Head Bolts | 2 pcs |
| O. | Medium Allen Head Bolts | 8 pcs |
| P. | Long Allen Head Bolts | 4 pcs |
| Q. | Flat Washers | 14 pcs |
| R. | Lock Washers | 14 pcs |
| S. | Long Phillips Head Wood Screws | 12 pcs |
| T. | Short Phillips Head Wood Screws | 12 pcs |
| U. | Allen Head Wrench | 1 pc |
| V. | Phillips Head Screwdriver | 1 pc |
| W. | Angle Screwdriver | 1 pc |

∗ Please make sure that you have all the parts and hardware indicated above before you begin assembly of this item.
∗ Use the hardware illustrations to determine correct piece and size.
∗ This item should be assembled on a soft surface to prevent scratching the finish during assembly.
∗ This item may require periodic tightening.

**1897636**
**Thames Queen Four Poster Bed**

**Hardware Illustrations**

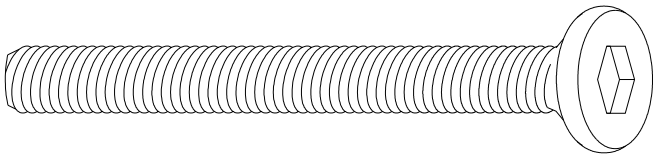

P. Long Allen Head Bolt

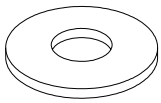

Q. Flat Washer

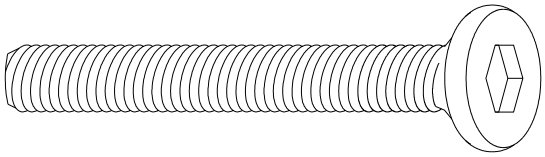

O. Medium Allen Head Bolt

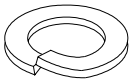

R. Lock Washer

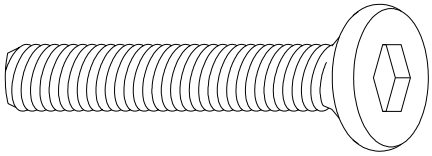

N. Short Allen Head Bolt

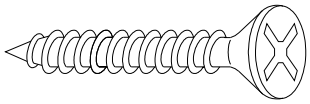

S. Long Phillips Head Wood Screw

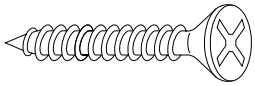

T. Short Phillips Head Wood Screw

# 1897636
# Thames Queen Four Poster Bed

## Assembly Of Headboard

**Parts required**

| | | | | | |
|---|---|---|---|---|---|
| A. | Headboard Posts | 2 pcs | Q. | Flat Washers | 6 pcs |
| C. | Headboard Panel | 1 pc | R. | Lock Washers | 6 pcs |
| N. | Short Allen Head Bolts | 2 pcs | U. | Allen Head Wrench | 1 pc |
| O. | Medium Allen Head Bolts | 4 pcs | | | |

1. **Attach Headboard Panel (C)**. Insert the Headboard Panel (C) into the pre-cut slots of the Headboard Posts (A). Secure with the Short Allen Head Bolts (N) and Medium Allen Head Bolts (O), Lock Washers (R), and Flat Washers (Q) using the Allen Head Wrench (U). (Make sure the finished side of the Headboard Panel (C) is facing the same direction as the metal attachment plate on the posts). See Illustration #1.

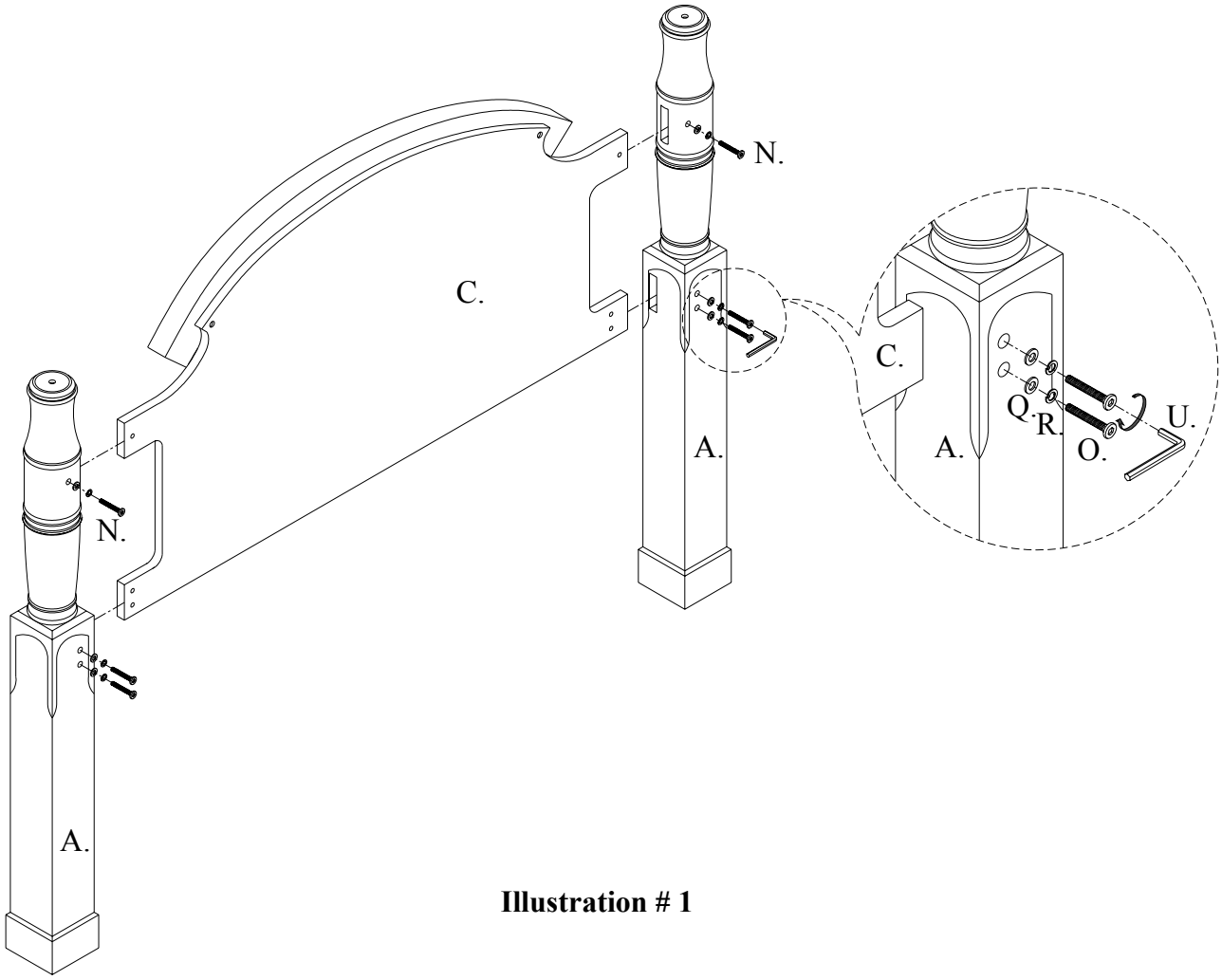


**Illustration # 1**

# 1897636
# Thames Queen Four Poster Bed

## Assembly Of Footboard Rail

**Parts required**

| | | | | | |
|---|---|---|---|---|---|
| B. | Footboard Posts | 2 pcs | Q. | Flat Washers | 4 pcs |
| D. | Footboard Rail | 1 pc | R. | Lock Washers | 4 pcs |
| P. | Long Allen Head Bolts | 4 pcs | U. | Allen Head Wrench | 1 pc |

2. **Attach Footboard Rail (D)**. Secure the Footboard Rail (D) to the Footboard Posts (B) with the Long Allen Head Bolts (P), Lock Washers (R), and Flat Washers (Q) using the Allen Head Wrench (U). (Make sure the unfinished side of the Footboard Rail (D) faces the same direction as the metal attachment plate on the posts). See Illustration #2.

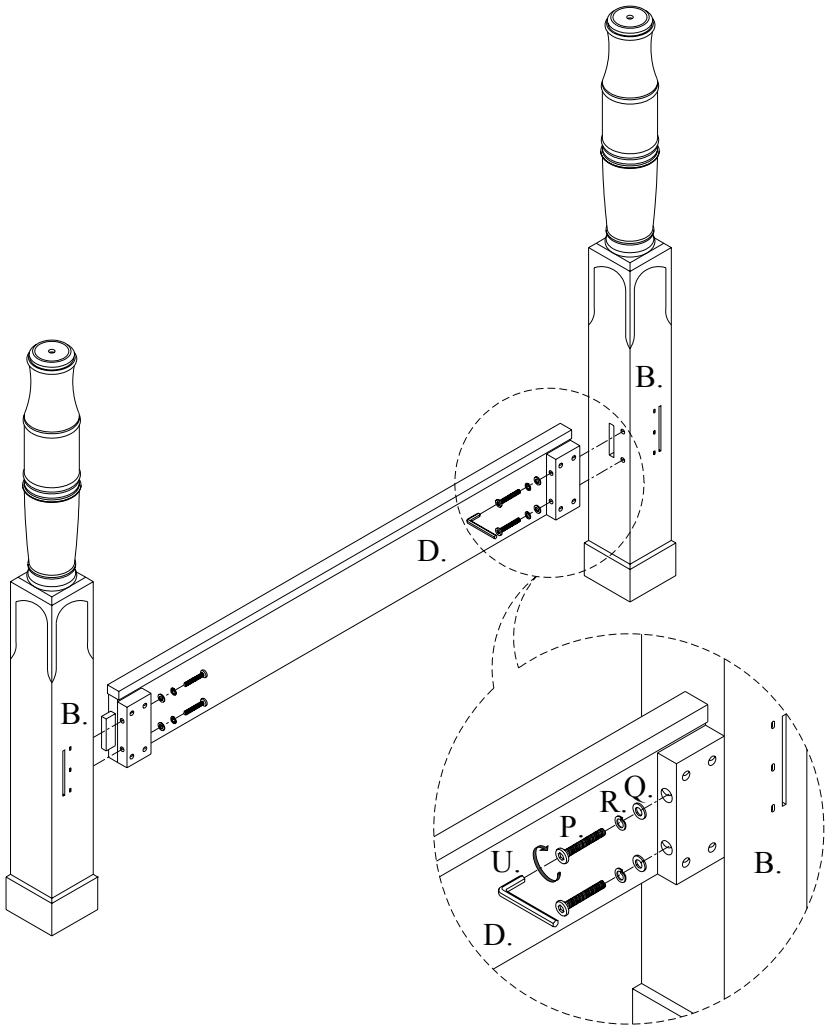


**Illustration # 2**

# 1897636
# Thames Queen Four Poster Bed

## Attach Leg Supports

**Parts required**

| | | | | | |
|---|---|---|---|---|---|
| L. | Center Support Slat | 1 pc | M. | Leg Supports | 3 pcs |

3. **Attach Leg Supports (M)** Align and insert the exposed threads of the Leg Supports (M) into the pre-threaded holes in the Center Support Slat (L). Tighten by turning in a clockwise direction. See Illustration #3.

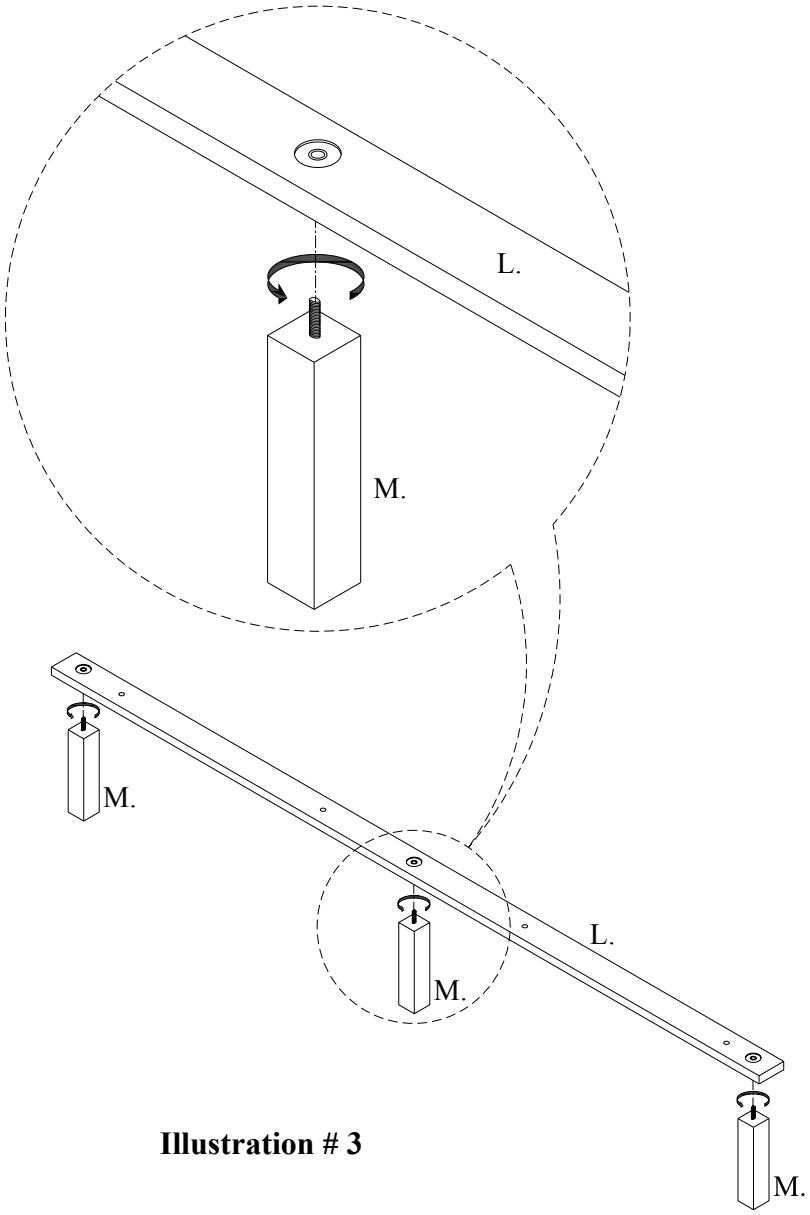


**Illustration # 3**

# 1897636
# Thames Queen Four Poster Bed

## Assembly Of Side Rails & Support Slats

**Parts required**

| | | | | | |
|---|---|---|---|---|---|
| J. | Side Rails | 2 pcs | S. | Long Phillips Head Wood Screws | 12 pcs |
| K. | Support Slats | 4 pcs | T. | Short Phillips Head Wood Screws | 8 pcs |
| L. | Center Support Slat | 1 pc | U. | Allen Head Wrench | 1 pc |
| O. | Medium Allen Head Bolts | 4 pcs | V. | Phillips Head Screwdriver | 1 pc |
| Q. | Flat Washers | 4 pcs | W. | Angle Screwdriver | 1 pc |
| R. | Lock Washers | 4 pcs | | | |

4. **Attach Side Rails (J)**. Insert the exposed hooks of the Side Rail (J) into the pre-bored slots of the Headboard Post (A) and Footboard Post (B). Press down on the Side Rail (J) to lock the hooks onto the pins in the Headboard Post (A) and Footboard Post (B). Repeat this step for the other side.
5. **Attach Support Slats (K)**. Align the pre-drilled holes in the middle of the Support Slats (K) with the pre-threaded holes in the Center Support Slat (L). Secure in place with the Medium Allen Head Bolts (O), Lock Washers (R), and Flat Washers (Q) using the Allen Head Wrench (U). Place the Support Slats (K) into the pre-cut slots in the cleats of the Side Rails (J). Secure both ends of each Support Slat (K) with the Short Phillips Head Wood Screws (T) using the Phillips Head Screwdriver (V). Secure the plate at the ends of the Side Rails (J) to the Headboard Posts (A) and the Footboard Posts (B) with the Long Phillips Head Wood Screws (S) using the Phillips Head Screwdriver (V).
6. Please take note that additional Angle Screwdriver (W) is provided. This will make attachment of the lowest hole in the plate much easier. See Illustration #4.

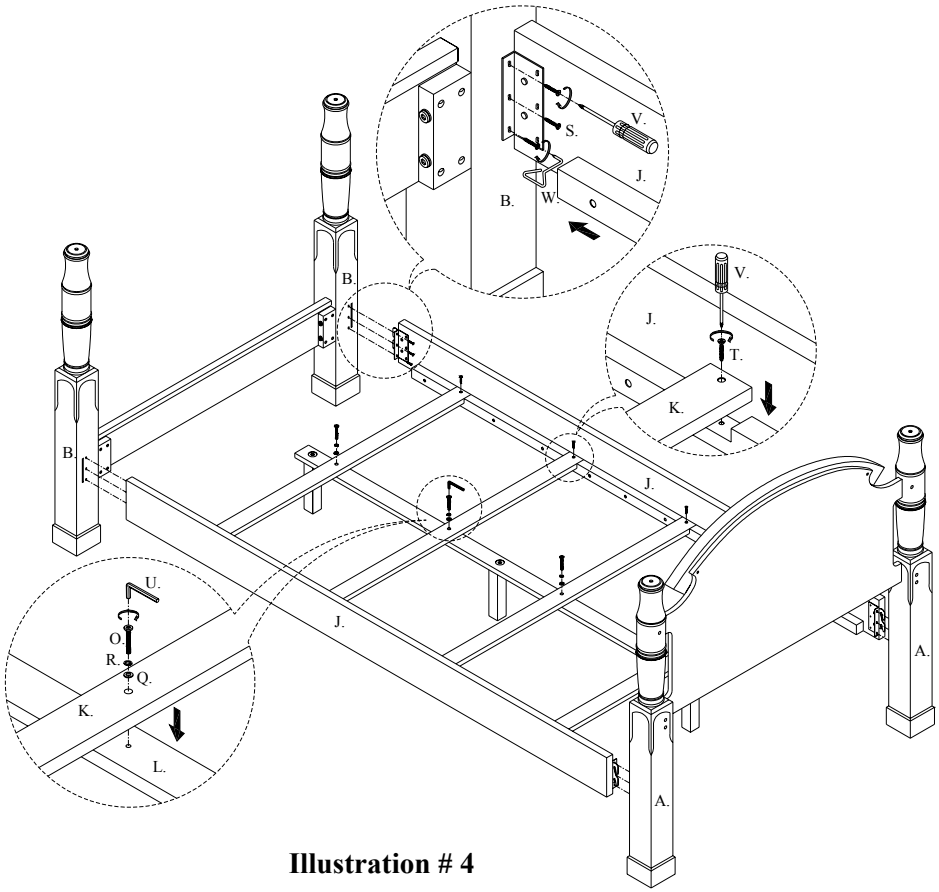


**Illustration # 4**

# 1897636
# Thames Queen Four Poster Bed

## Assembly Of Fluted Posts & Finials

**Parts required**

| | | | | | |
|---|---|---|---|---|---|
| E. | Fluted Posts | 4 pcs | F. | Finials | 4 pcs |

7. **Attach Fluted Posts (E)**. Insert the exposed threads at bottom of the Fluted Posts (E) into the pre-threaded inserts of the Headboard Posts (A) and Footboard Posts (B) and secure by turning in a clockwise direction. See Illustration #5.
8. **Attach Finials (F)**. Place the Finials (F) on top of the exposed threads at top of the Fluted Posts (E) and secure by turning in a clockwise direction. See Illustration #5.

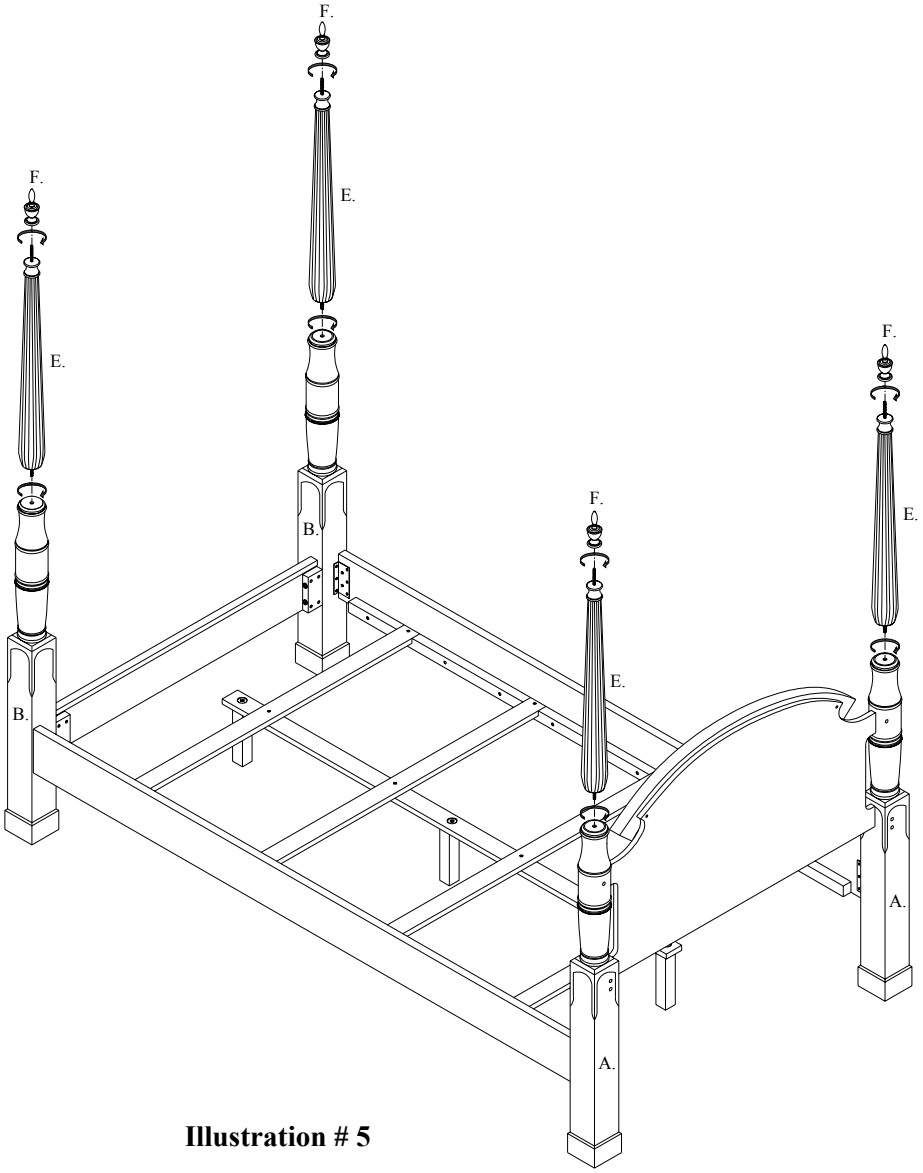


**Illustration # 5**

# 1897636
# Thames Queen Four Poster Bed

## Attach Optional Canopy

**Parts required**

| | | | | | |
|---|---|---|---|---|---|
| G. | Long Canopy Rails | 2 pcs | T. | Short Phillips Head Wood Screws | 4 pcs |
| H. | Short Canopy Rails | 2 pcs | V. | Phillips Head Screwdriver | 1 pc |
| I. | Support Canopy Rails | 2 pcs | | | |

9. **Attach Short Canopy Rails (H) & Long Canopy Rails (G)**. To add the Canopy Top Assembly to the already assembled Queen Four Poster Bed, first remove the Finials (F) on top of the Fluted Posts (E) by turning in a counter-clockwise direction. Then align the pre-drilled holes in the ends of the Short Canopy Rails (H) with the exposed threads of the Fluted Posts (E). Align and overlap the Long Canopy Rails (G) on the exposed threads. Place the Finials (F) on the exposed threads and secure by turning in a clockwise direction. See Illustration #6.
10. **Attach Support Canopy Rails (I)**. Place the Support Canopy Rails (I) into the pre-cut slots in the Long Canopy Rails (G) and align pre-drilled holes. Secure with Short Phillips Head Wood Screws (T) using the Phillips Head Screwdriver (V). See Illustration #6.

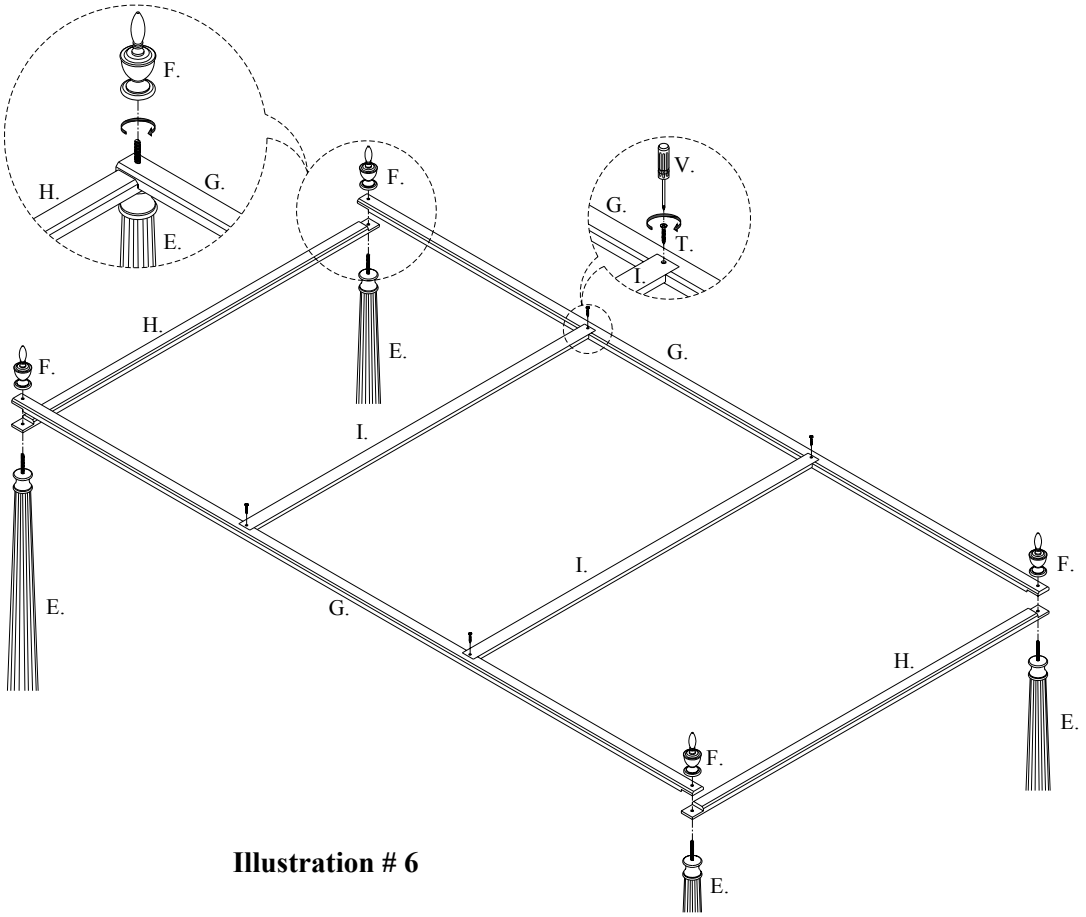


**Illustration # 6**